Onity
A UTC Fire & Security Company

Intellity RFID Intel
Energy Saving Device

- Allows significant reduction in power consumption (up to 65%)
- Cuts electric circuits after a 1 minute delay
- Works with MiFare® technology cards
- Intelligent system which differentiates guest and master cards; activates one or two relays depending on the information read
- Attractive blue light for easy location in the dark
- Green and red lights to indicate validity
- Designed to be installed in a standard electrical box (square or rounded)
- No need to communicate with portable programmer
- Complete system with management software and card encoder (basic limited capability version also available without them).
- Compatible with Onity *ADVANCE* RFID lock range. System can be configured in such way that one sole card works with 3 devices: room lock, energy saver and locker

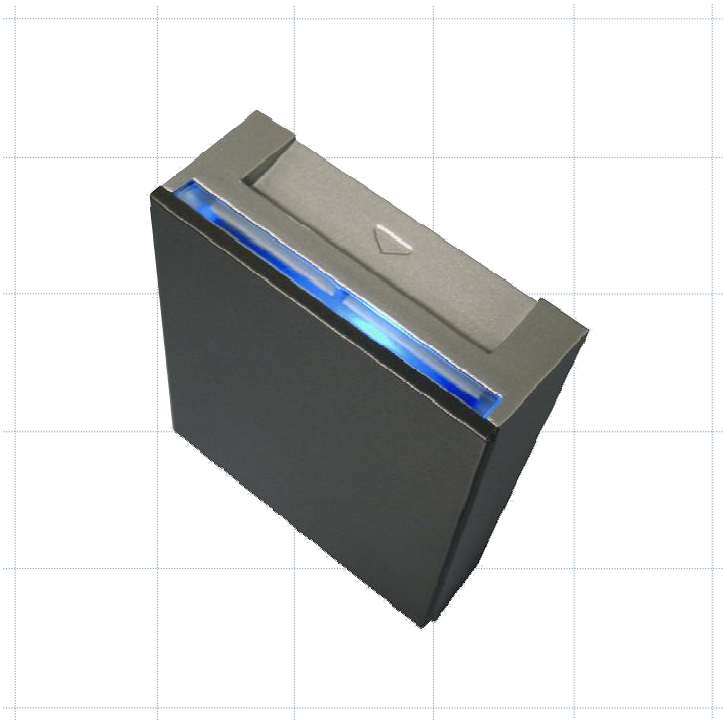

Weight: 125gr
Dimensions: 87 x 76 x 30 mm (H x W x D)
Packing: Plastic bag
Standard colours:

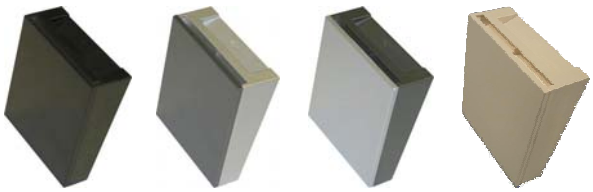

Black | Silver with Dark Grey front | Dark Grey with Silver front | White

Power Consumption: Nominal 16mA, Max. 23mA
Power Supply:
- Voltage: 110 or 230 Vac. Tolerance 10%
- Frequency: 50 – 60 Hz
- Output: 2 Relays
  Power cut-off: 12A, 250V~,cos φ = 1
  8A, 250V~,cos φ = 0,6
  Incandescent Max. Load: 10A
  Halogen Max. Load: 10A

Connections Diagram

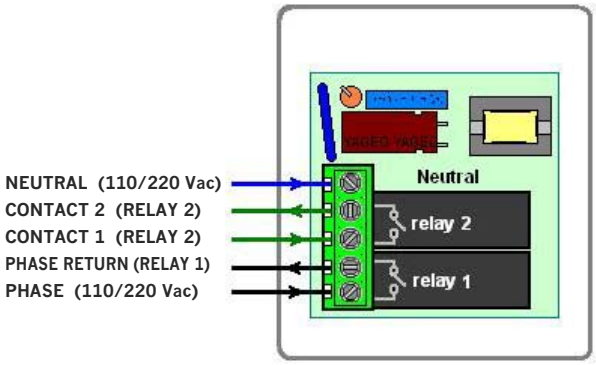

IMPORTANT: Halogen, electronic fluorescent and low consumption lamps present a very high consumption (up to 20Amp) at switch-on and switch-off time, rapidly damaging relay contacts. If this type of lamps are being used, Onity recommends to check if the use a contactor is required.